Fingerprint machine wiring instructions

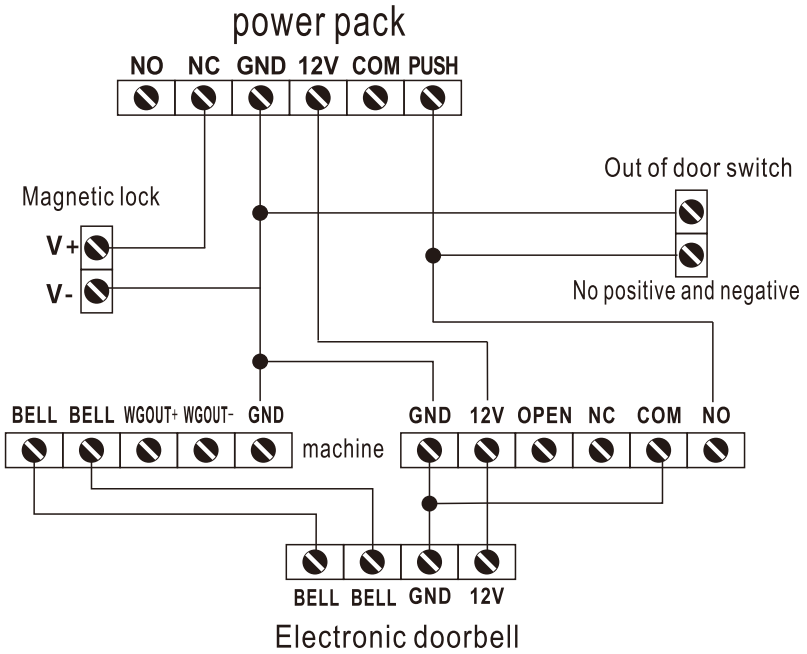

centificate of conformity

After inspection, the product accords with various technical requirements and is granted to the factory.

Product Name: _____

Product model: _____

Examination clerk: _____

Date: _____

warranty card

Thank you for the purchase of our company's products, we will strictly follow the contract to carry out the warranty promise, but in the case of not the following, we will charge the expenses as appropriate.

1. Failure to operate in accordance with the instructions of the use manual, causing damage artificially:
2. Damage caused by force majeure:
3. free warranty expires.

Product Name:	Number:
Date of purchase:	Purchaser:
Warranty date:	

date	fault	maintain	Maintenance date	fault cause

Operation instructions of the fingerprint machine

1. New users

Press the "M" key to enter the "operation menu"

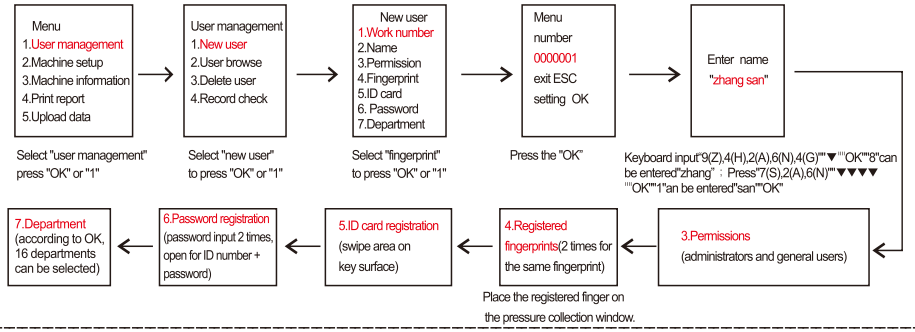

2.Personal department Settings

Press the "M" key to enter the "operation menu"

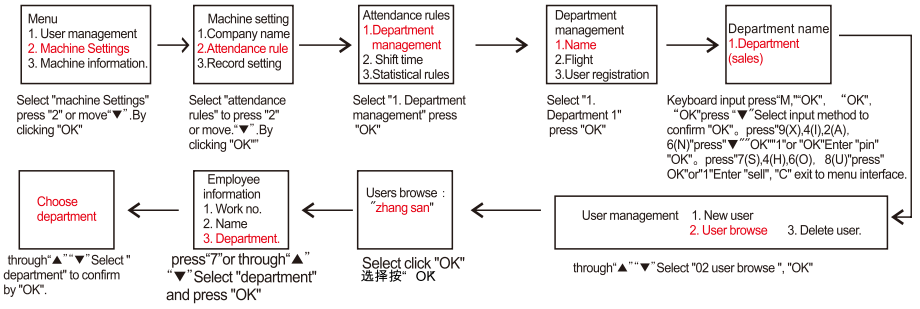

3.Increase the frequency

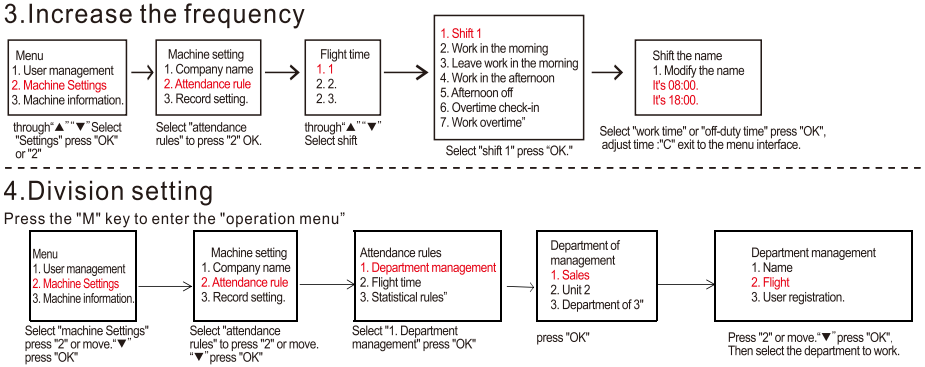

4.Division setting

Press the "M" key to enter the "operation menu"

5.Administrator setup

Press the "M" key to enter the "operation menu"

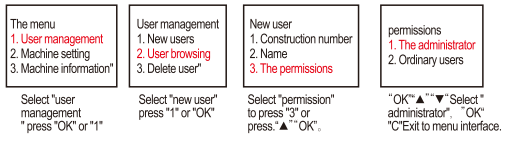
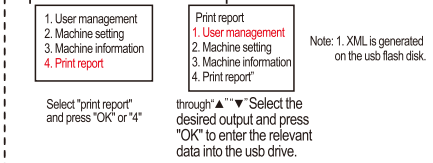
6.Output report - USB interface to USB, press "M" to enter "operation menu"